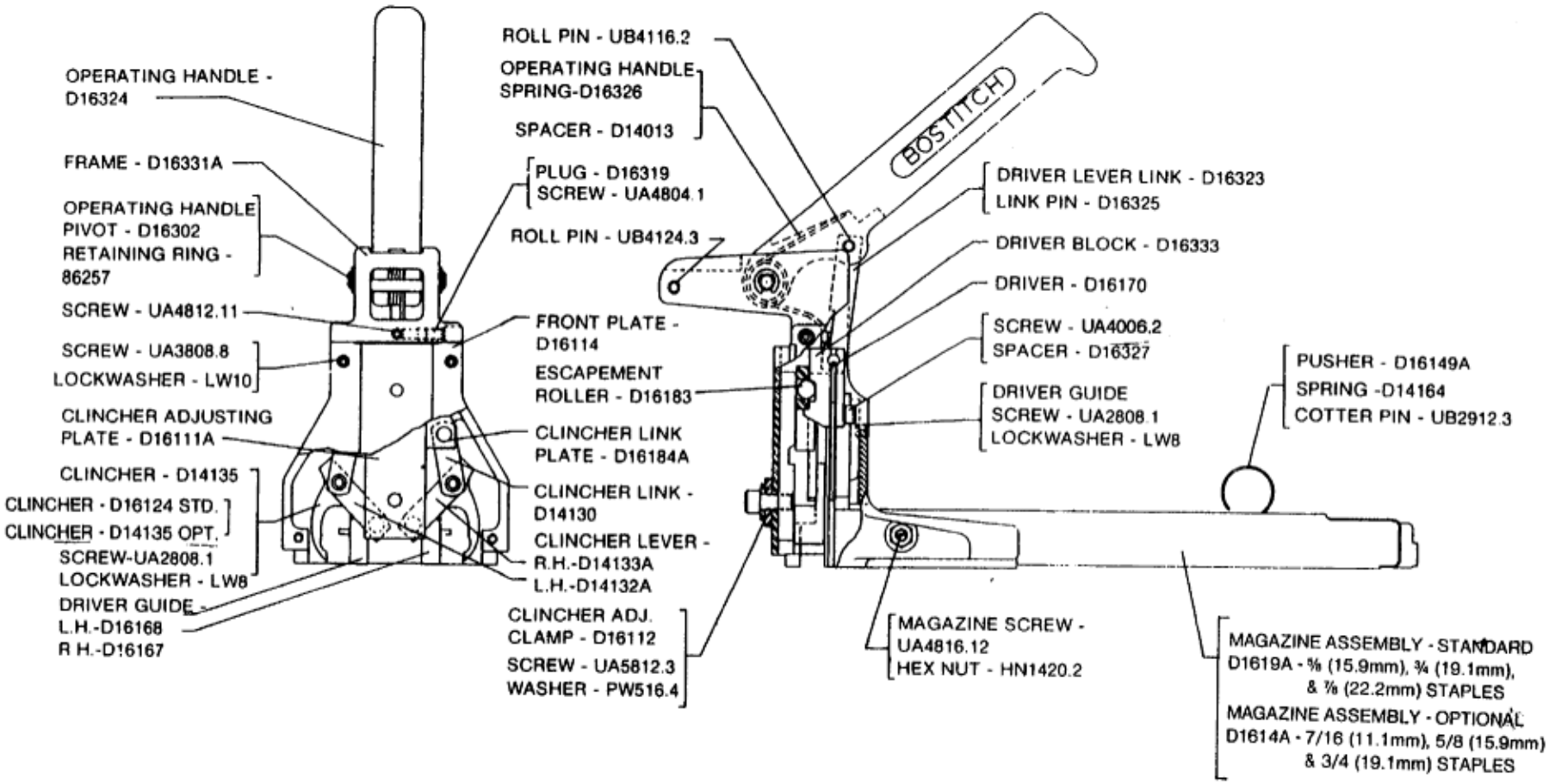STANLEY-BOSTITCH MODEL D16-2 BOXLOK STAPLER PARTS CHART